Silicon N-Channel Power F-MOSFET
2SK3024

■ Features

- Avalanche energy capacity guaranteed
- High-speed switching
- Low ON-resistance
- No secondary breakdown
- Low-voltage drive
- High electrostatic breakdown voltage

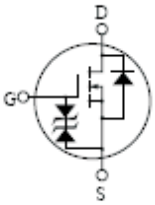

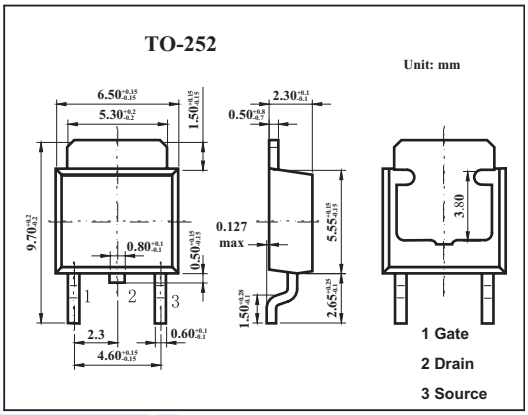

■ Absolute Maximum Ratings Ta = 25℃

Parameter	Symbol	Rating	Unit
Drain to source voltage	V_{DSS}	60	V
Gate to source voltage	V_{GSS}	±20	V
Drain current	I_D	±20	A
	I_{dp} *	±40	A
Power dissipation T_C=25℃	P_D	20	W
T_A=25℃		1	
Channel temperature	T_{ch}	150	℃
Storage temperature	T_{stg}	-55 to +150	℃

* PW≤10μs,Duty Cycle≤1%

■ Electrical Characteristics Ta = 25℃

Parameter	Symbol	Testconditons	Min	Typ	Max	Unit
Drain to source breakdown voltage	V_{DSS}	I_D=1mA,V_{GS}=0	60			V
Drain cut-off current	I_{DSS}	V_{DS}=50V,V_{GS}=0			10	μA
Gate leakage current	I_{GSS}	V_{GS}=±20V,V_{DS}=0			±10	μA
Gate threshold voltage	V_{th}	V_{DS}=10V,I_D=1mA	1		2.5	V
Forward transfer admittance	| Y_{fs} |	V_{DS}=10V,I_D=10A	8	12		S
Drain to source on-state resistance	$R_{DS(on)}$	V_{GS}=10V,I_D=10A		33	50	mΩ
		V_{GS}=4V,I_D=10A		44	70	mΩ
Input capacitance	C_{iss}	V_{DS}=10V,V_{GS}=0,f=1MHZ		330		pF
Output capacitance	C_{oss}			290		pF
Reverse transfer capacitance	C_{rss}			70		pF
Turn-on delay time	t_{on}	I_D=10A,$V_{GS(on)}$=10V,R_L=3Ω,V_{DD}=30V		20		ns
Rise time	t_r			125		ns
Turn-off delay time	t_{off}			1480		ns
Fall time	t_f			520		ns